DA PHILOS BOLD©

estal
www.estal.com
+ 34 972 821 676

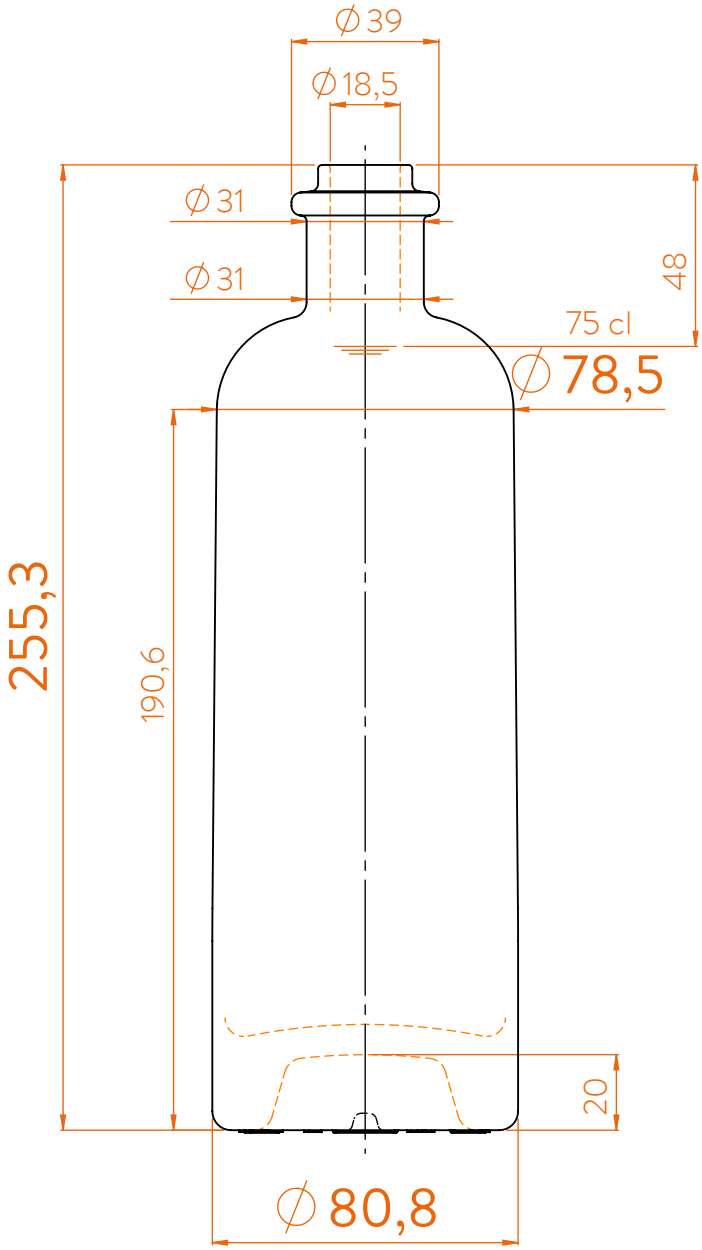

Modelo registrado/
Registered model/
Modèle enregistré/

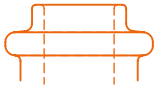

Special Cork

- EXTRAFLINT
- FLINT WILD GLASS
- DARK WILD GLASS

DATOS TÉCNICOS
TECHNICAL DATA
DONNÉES TECHNIQUES

	75 cl
Peso / Weight / Poids	700 gr
Altura total / Total height / Hauteur totale	255,3 mm
Diámetro del cuerpo / Boby diameter / Diamètre du corps	80,8/78,5 mm
Ø interno boca / ∅ inner mouth / ∅ intérieur bouche	18,5 mm
Capacidad a verter / Brimfull / Capacité ras-bord	772 ml

At first the DA PHILOS BOLD range is proposed in 75/70 cl.
Following business opportunities, other sizes (from miniature 5cl to big size 300cl) will be added to the range.

The elements detailed in this document are not contractual. They are only indicative.