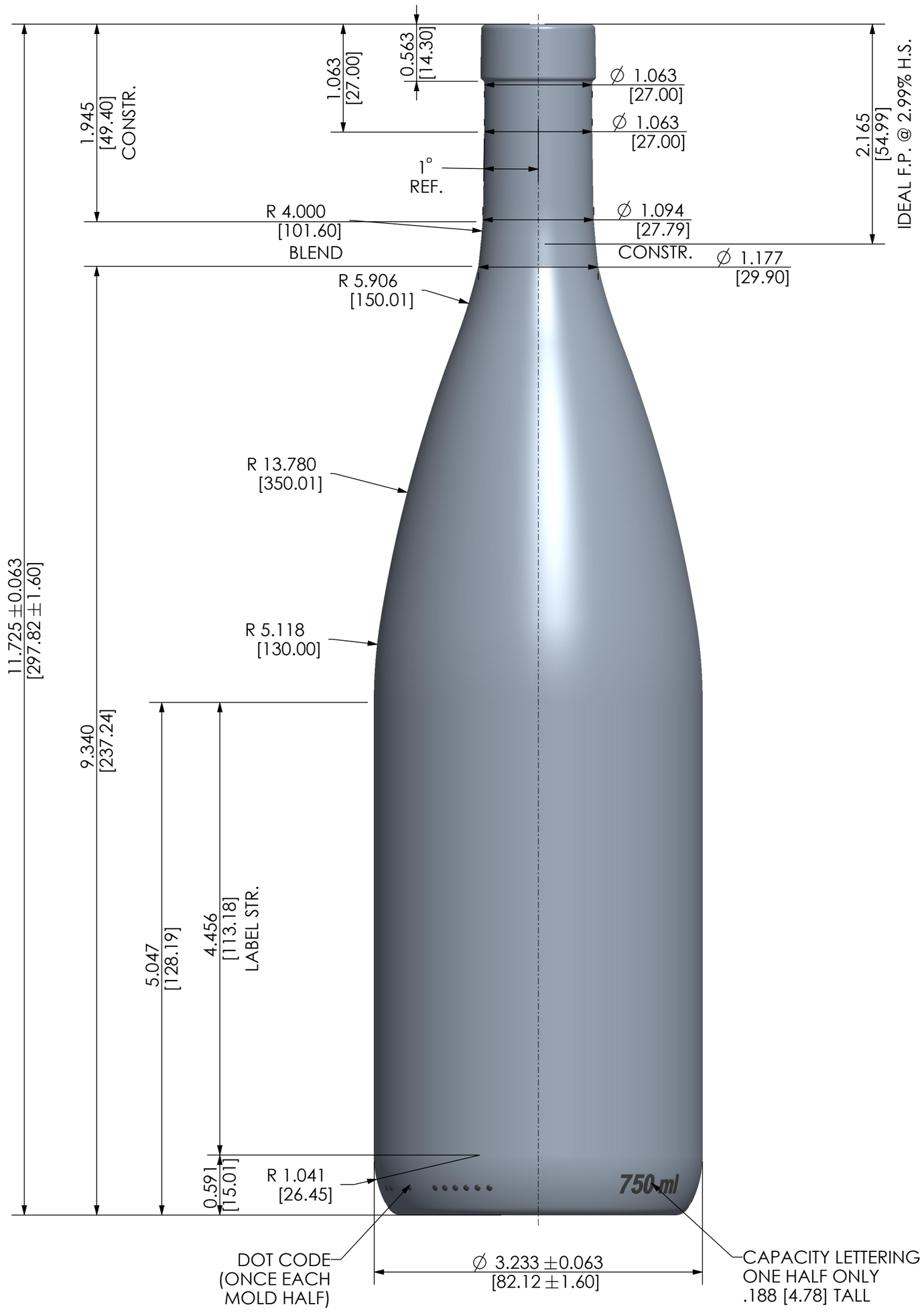

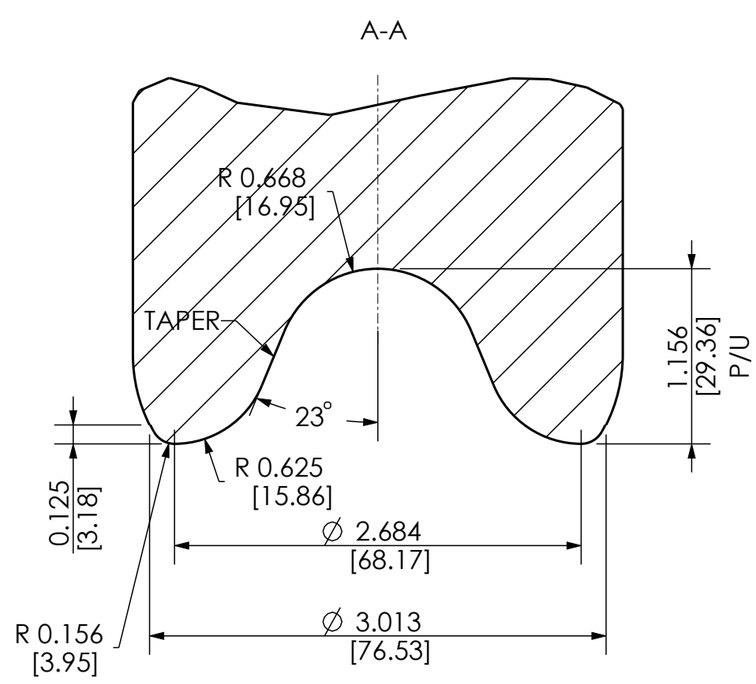

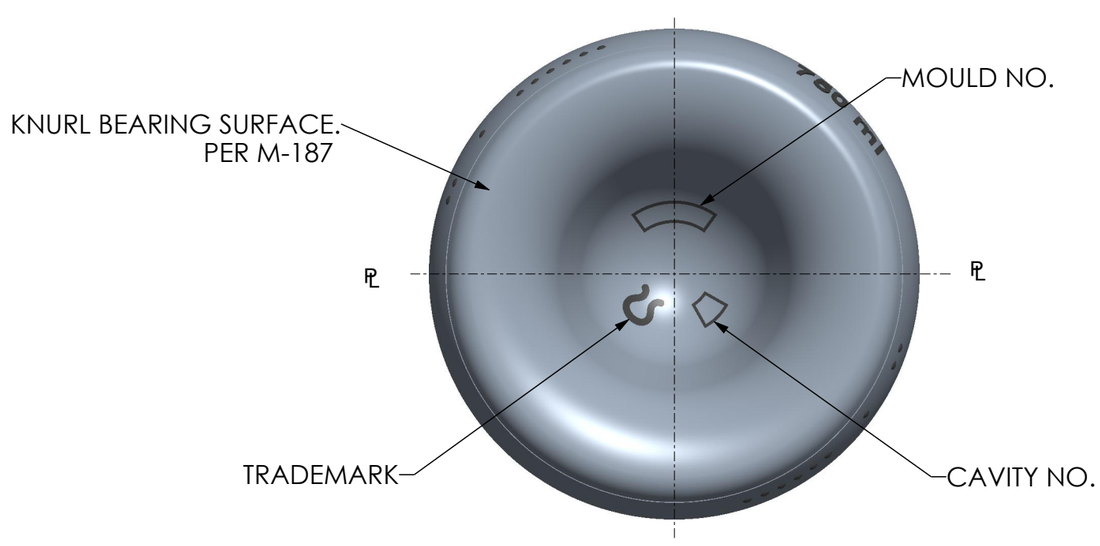

NOTES:

1. FINISH CHANGE WITH 9375026.

2. CAUTION: THIS CONTAINER IS NOT DESIGNED FOR INTERNAL PRESSURE.

3.REQUIRED INDICIA: TRADEMARK, CAVITY NO. PLACE ON BOTTOM AND OR HEEL.

REV.	DATE	DESCRIPTION	DESIGNER
B	05/13/24	REDRAWN ON CREO TEMPLATE, UPDATED DESCRIPTION	DeatonH
A	04/17/20	ASSIGN CONTAINER NUMBER	CroweJ

REVISIONS

PRODUCT DESIGN
GLASS-US

ArdaghGlassPackaging
10194 Crosspoint Blvd., Suite 410
Indianapolis, IN 46256

THE INFORMATION CONTAINED HERIN IS PROPRIETARY, IS PROVIDED IN CONFIDENCE AND SHALL NOT BE DISCLOSED OR COPIED, IN WHOLE OR IN PART, WITHOUT THE WRITTEN PERMISSION OF ARDAGH GROUP.

TYPE: STOCK	PROCESS: BLOW-BLOW	FINISH: 30A-3100-F-973
TIP ANGLE: 18.55	REFERENCES: 9375026	
CUSTOMER: STOCK		
DESCRIPTION: W 750 ML STOCK BURG VINOLOK		
O.F. CAPACITY: 26.120 Fl.Oz. (772.461 ml)		
F.P. CAPACITY: 25.361 ± 0.160 Fl.Oz. (750.014 ± 4.732 ml)		
GLASS WEIGHT: 19.630 ± 0.750 Oz. (556.501 ± 21.262 g)		
CD NO.: CD-3013	DWG. NO.: T-30012	CONTAINER NO.: 9375026V